TITANIC

17 014

1/400 scale detail set for Academy kit

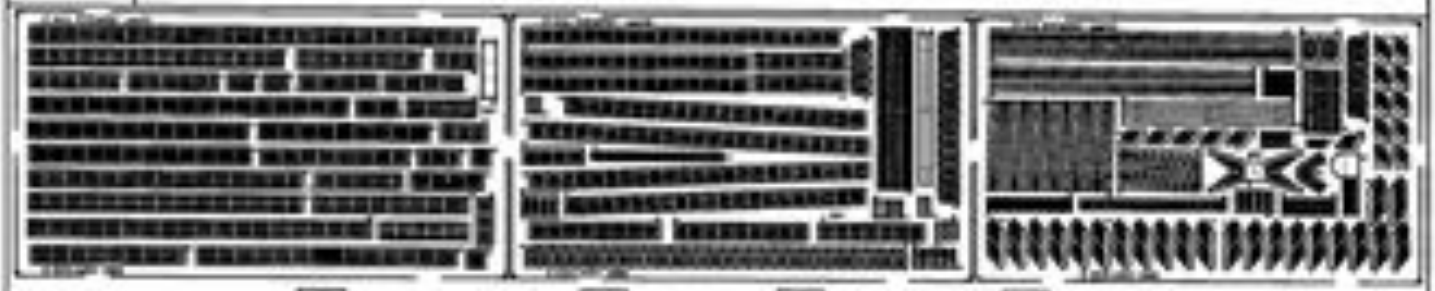

OPPOSITE SIDE | REMOVE | REPLACE | GRIND

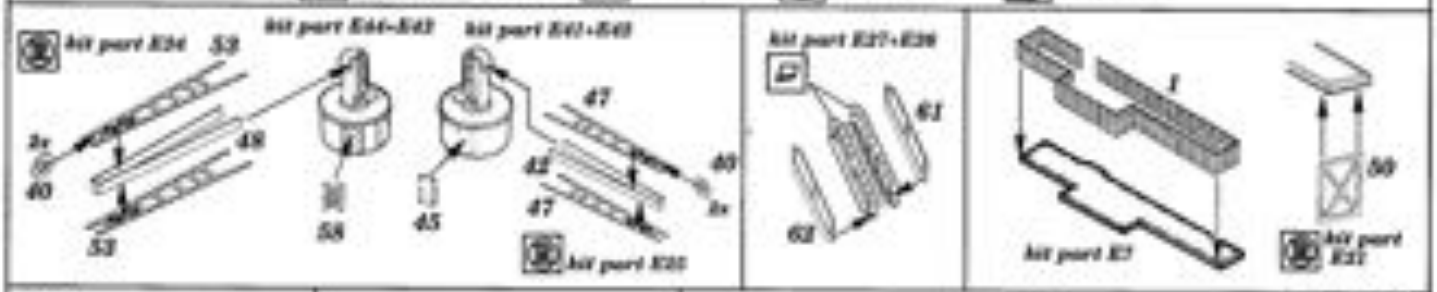

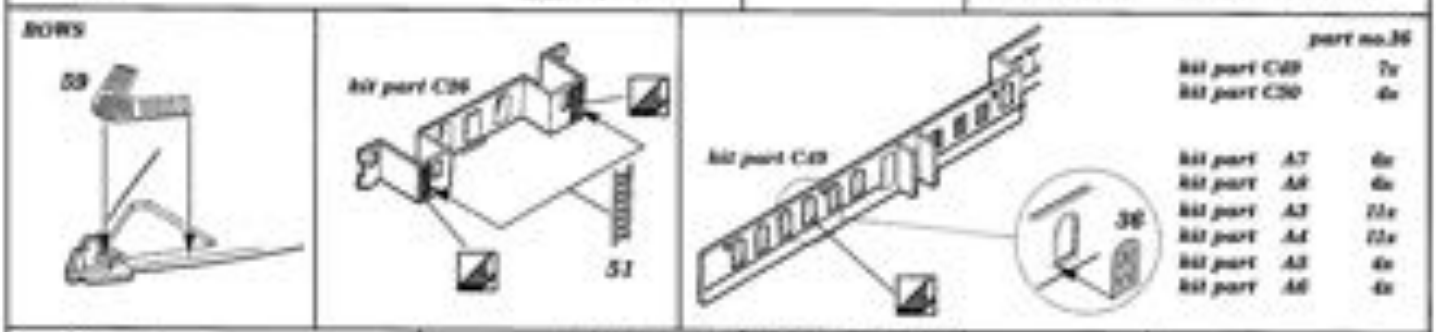

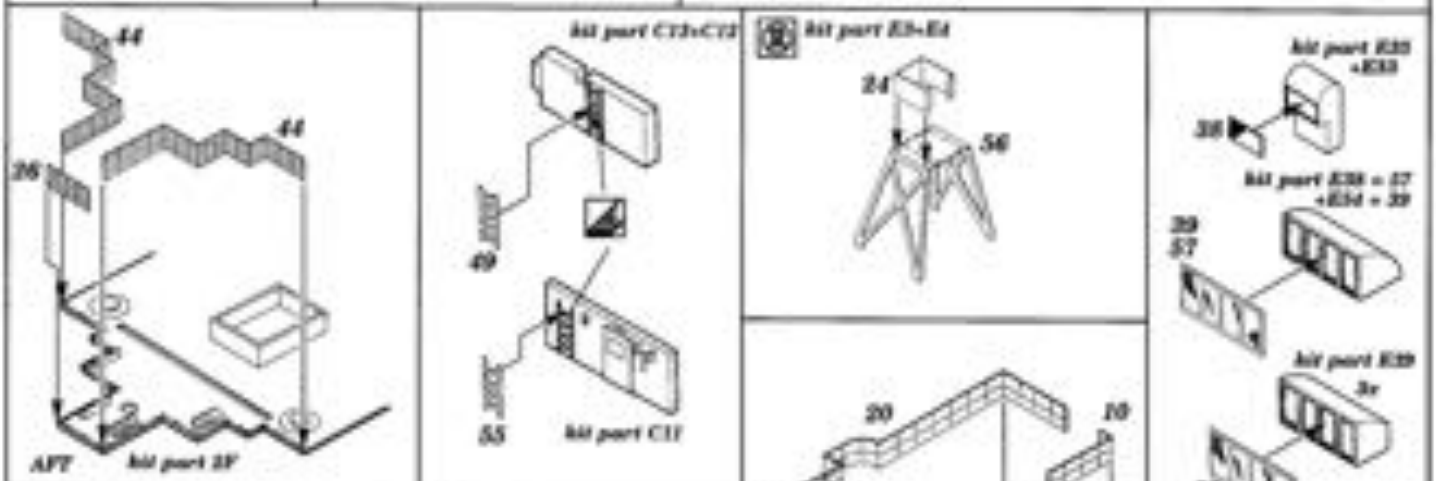

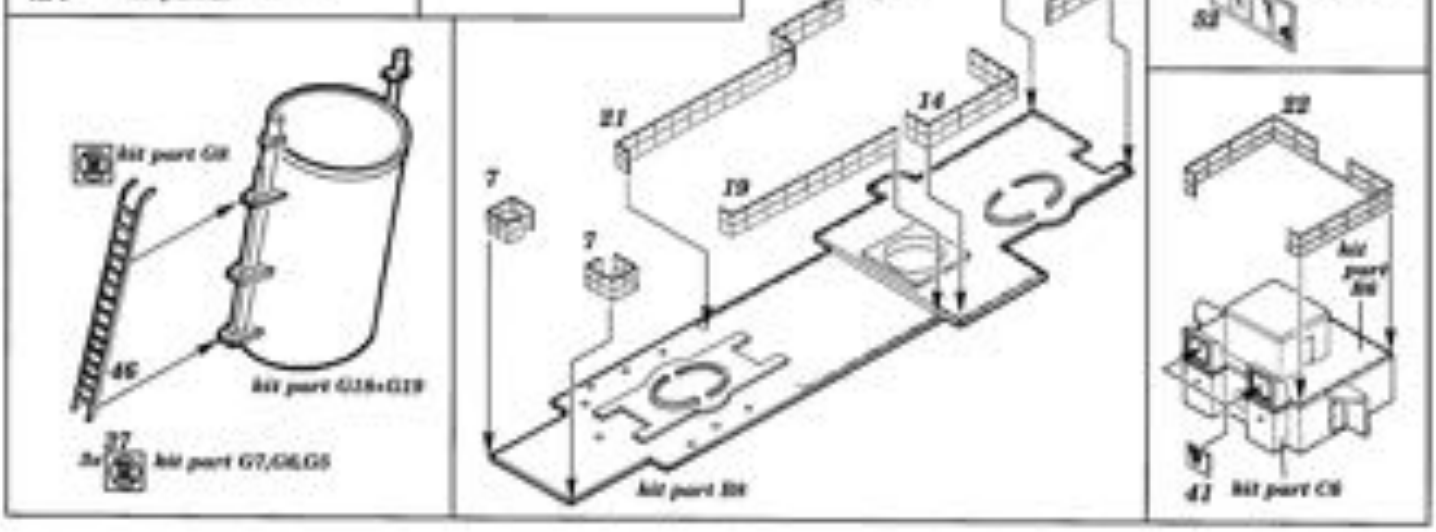

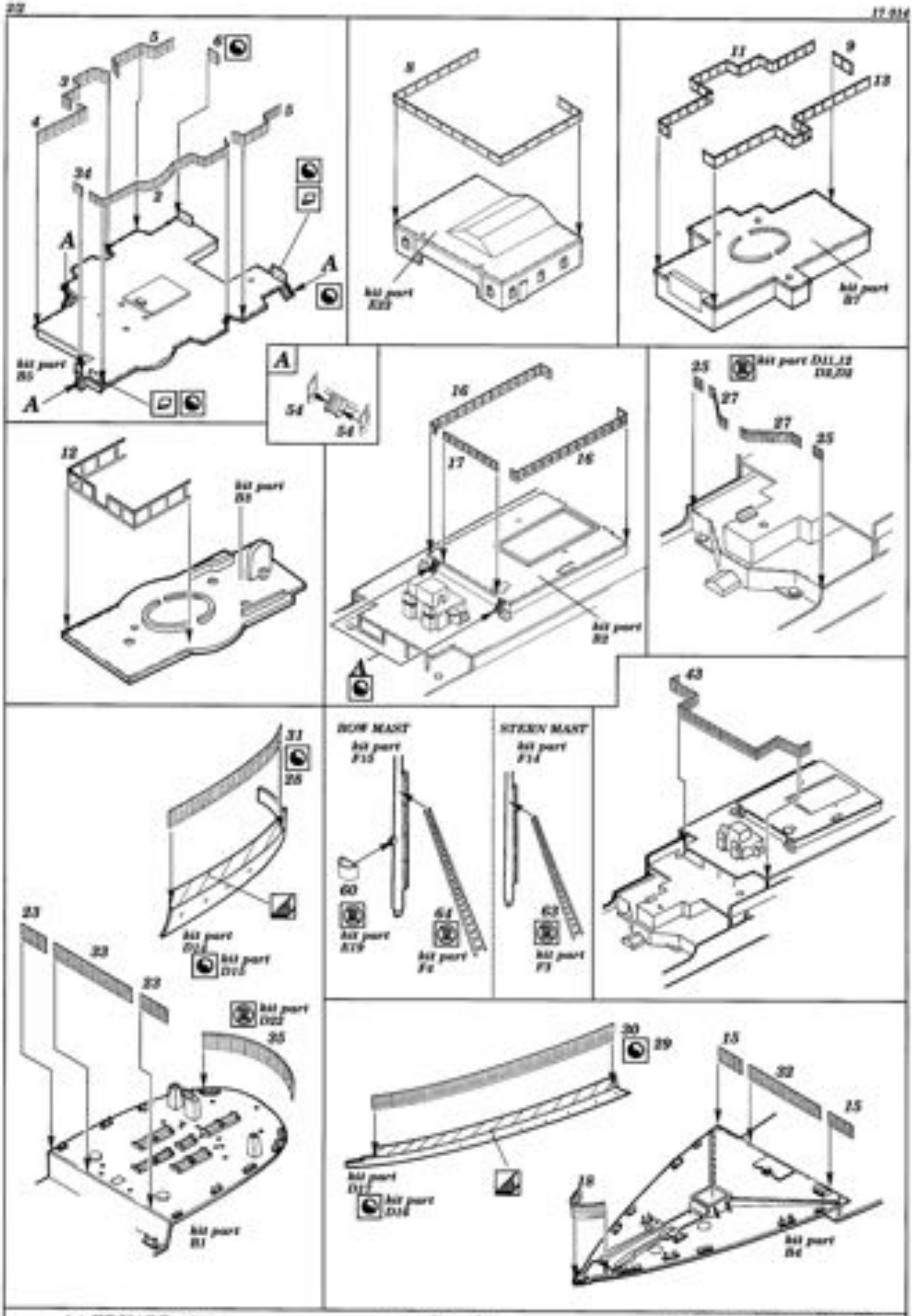
5
6
3
4
8
34
2
A
A
A
kit part B1
8
kit part B3
11
9
10
kit part B7
A
54
54
12
kit part B8
16
17
16
kit part B2
A
25
kit part D11,12 D18,D8
27
27
25
43
31
28
BOW MAST
kit part F15
60
kit part B19
64
kit part F6
STERN MAST
kit part F14
62
kit part F5
23
22
22
kit part D12
kit part D11
kit part D22
35
kit part B1
30
29
15
32
15
kit part D17
kit part D16
18
kit part B4